Fig. 24 SEAT

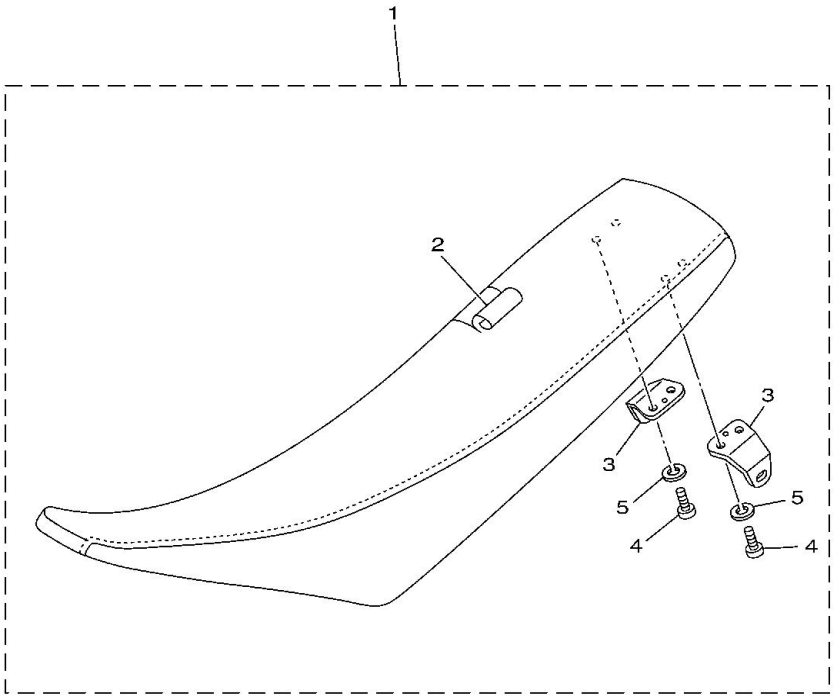

5NY1100-A241

Ref. No.	Part No.	Description		Remarks
1	1SS-24770-00	SEMI-DOUBLE SEAT ASSY	1	
2	1SS-2470F-00	. SEAT COVER COMP.	1	
3	5NY-24728-10	. BRACKET, SEAT	2	
4	97002-06012	. BOLT	4	
5	92902-06100	. WASHER, SPRING	4	

Copyright(C) 2009 YAMAHA MOTOR CO. LTD. JAPAN All rights reserved